Power seats and mirror adjustment with Memory

From November 1997

Deviate relay location and fuseplacements as well as the locations of multiple connectors see section "component locations".

Relay location on the thirteenfold auxiliary relay panel, above relay panel:

Relay panel:

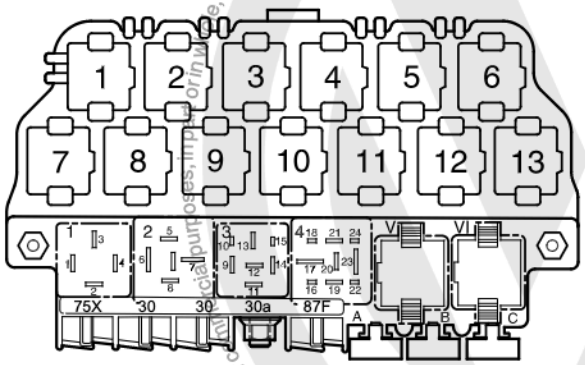

3B–20676

Relay location on the eightfold auxiliary relay panel, behind relay panel:

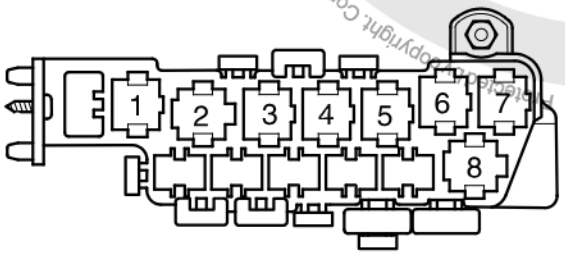

3B–20515

Fuse colors

30 A - green
25 A - white
20 A - yellow
15 A - blue
10 A - red

Volkswagen AG. Volkswagen AG does not guarantee or accept any liability with respect to the correctness of information in this document. Copyright by Volkswagen AG. Reproduction, copy, or publication, in whole or in part, is not permitted unless authorised by Volkswagen AG. Copyright. Copying for private or commercial purposes, in whole or in part, is not permitted unless authorised by Volkswagen AG.

7,5 A - brown
5 A - beige

Protected by copyright. Copying for private or commercial purposes, in part or in whole, is not permitted unless authorised by Volkswagen AG. Volkswagen AG does not guarantee or accept any liability with respect to the correctness of information in this document. Copyright by Volkswagen AG.

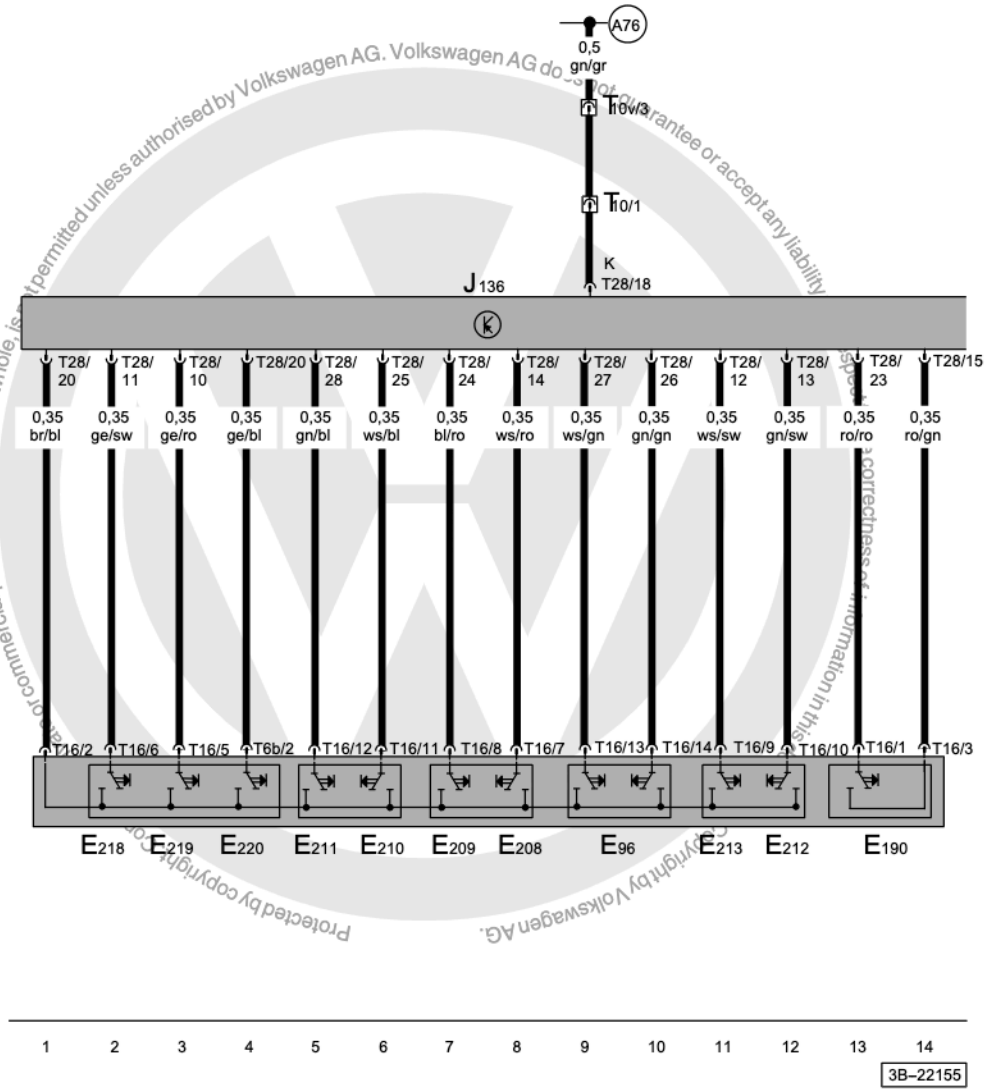

Memory seat control module, buttons for front height adjustment, buttons for front rear adjustment, buttons for length adjustment

E96	Driver's Backrest Adjustment Switch
E190	Seat memory lock-out switch
E208	Button for front height adjustment, upwards, driver seat
E209	Button for front height adjustment, downwards, driver seat
E210	Button for rear height adjustment, upwards, driver seat
E211	Button for rear height adjustment, downwards, driver seat
E213	Button for length adjustment, backward, driver seat
E218	Button for driver 1, memory seat
E219	Button for driver 2, memory seat
E220	Button for driver 3, memory seat
J136	Memory Seat Control Module
T10	10-Pin Connector, brown, near driver's seat
T10v	10-Pin Connector, pink, A-pillar, right
T16	16-Pin Connector, On Board Diagnostic (OBD), below instrument panel, left
A76	Connector (K-diagnosis wire), in instrument panel wiring harness

ws	=	white
sw	=	black
ro	=	red
br	=	brown
gn	=	green
bl	=	blue
gr	=	grey
li	=	lilac
ge	=	yellow
or	=	orange
rs	=	pink

Protected by copyright. Copyright by Volkswagen AG. Volkswagen AG does not guarantee or accept any liability with respect to the correctness of information in this document. Copying for commercial purposes, in part or in whole, is not permitted unless authorised by Volkswagen AG.

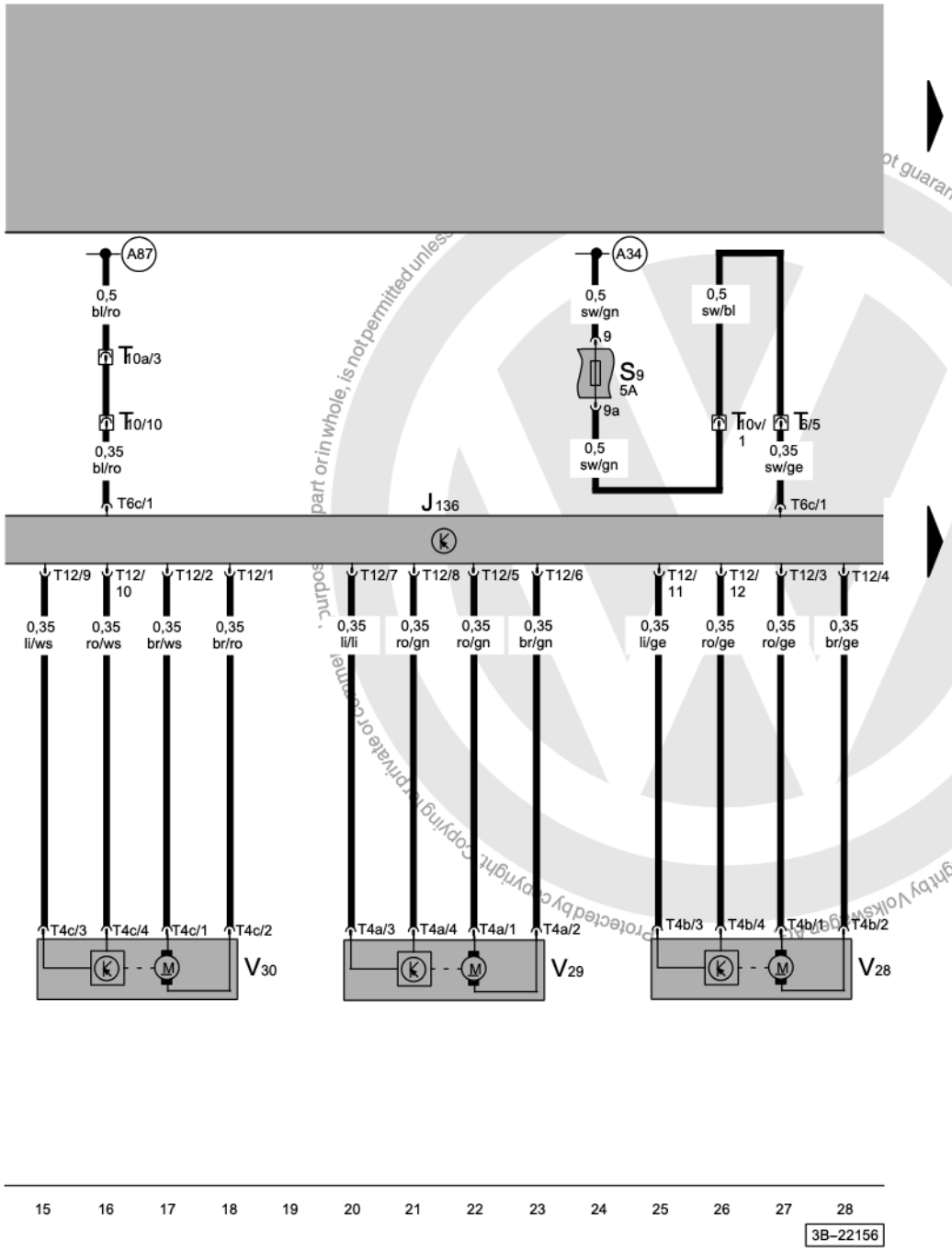

Memory seat control module, driver's seat adjusting motors

J136	Memory Seat Control Module
S9	Fuse 9 in fuse holder
T4a	4-Pin Connector
T4b	4-Pin Connector
T4c	4-Pin Connector
T6	6-Pin Connector, red, near driver's seat
T6c	6-Pin Connector
T10	10-Pin Connector, brown, near driver's seat
T10a	10-Pin Connector, grey, connector station A-pillar, left
T10v	10-Pin Connector, pink, on A-pillar, right
T12	12-Pin Connector
V28	Driver's Seat Fore/Aft Adjusting Motor
V29	Driver's Seat Front Height Adjusting Motor
V30	Driver's Seat Rear Height Adjusting Motor
A34	wire connection (75x), in instrument panel wiring harness
A87	Connector (reverse lamp), in instrument panel wiring harness

ws	=	white
sw	=	black
ro	=	red
br	=	brown
gn	=	green
bl	=	blue
gr	=	grey
li	=	lilac
ge	=	yellow
or	=	orange
rs	=	pink

Copyright by Volkswagen AG. Protected by copyright. Copying for private or commercial purposes, in part or in whole, is not permitted unless authorized. We do not guarantee or accept any liability with respect to the correctness of information in this document.

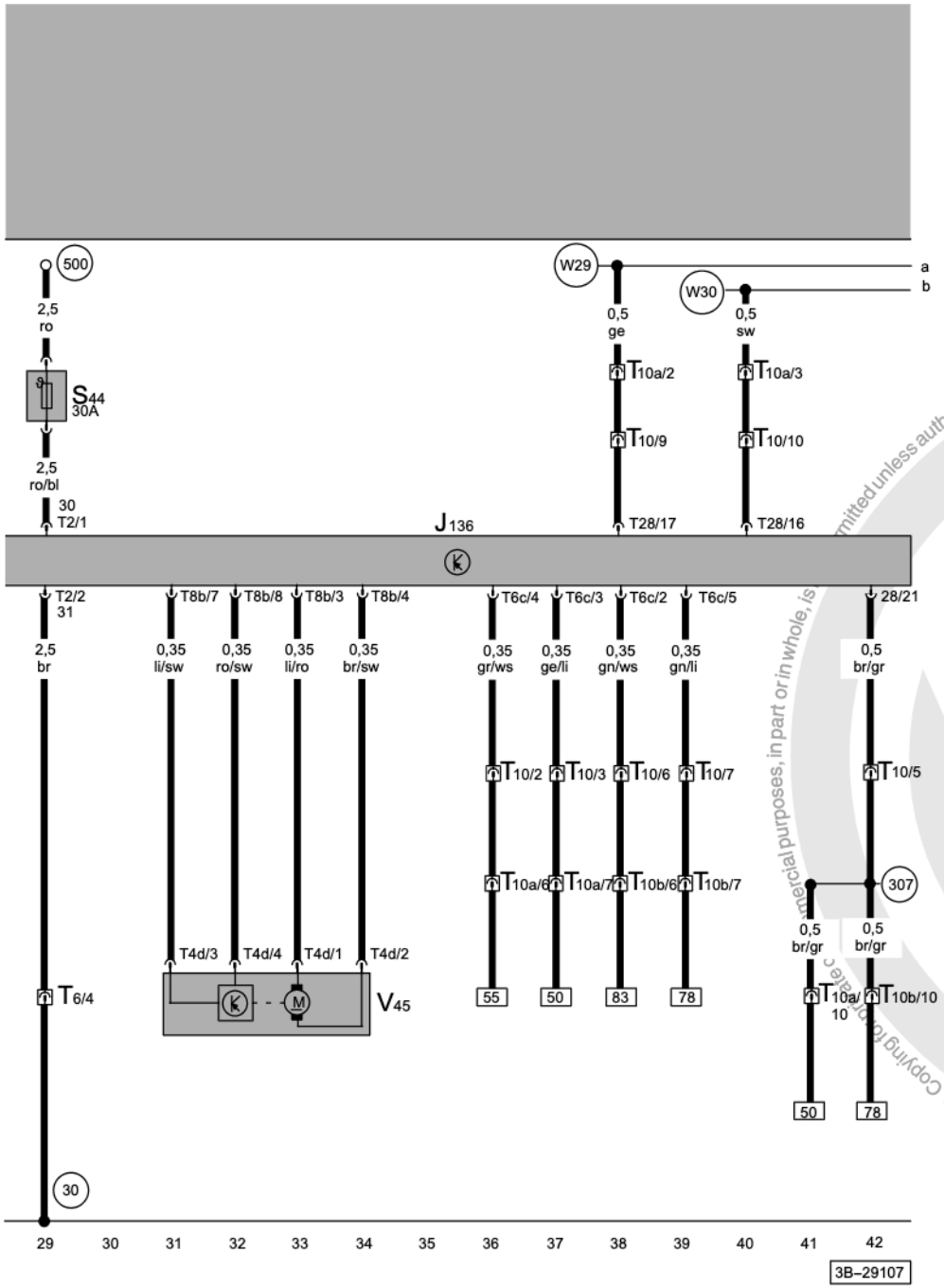

Memory seat control module, driver's backrest adjusting motor

J136	Memory Seat Control Module
S44	Power (Memory) Seat Circuit Breaker
T2	Double Connector
T4d	4-Pin Connector, black
T6	6-Pin Connector
T6c	6-Pin Connector
T8b	8-Pin Connector
T10	10-Pin Connector, brown
T10a	10-Pin Connector, grey, connector station A-pillar, left
T10b	10-Pin Connector, green, connector station A-pillar, left
V45	Driver's Backrest Adjusting Motor
30	Ground connection, -1-, beside fuse/relay panel
307	Ground connection for sensor (floor wiring harness)
500	Threaded connection -1- (30) on the relay plate
W29	Plus connector -2- (A-Bus), in wiring harness, floor
W30	Plus connector -2- (B-Bus), in wiring harness, floor

ws	=	white
sw	=	black
ro	=	red
br	=	brown
gn	=	green
bl	=	blue
gr	=	grey
li	=	lilac
ge	=	yellow
or	=	orange
rs	=	pink

Reproduced by copyright. Copyright by Volkswagen AG. Copying for private or commercial purposes, in part or in whole, is not permitted unless authorised by Volkswagen AG. Volkswagen AG does not guarantee or accept any liability with respect to the correctness of information in this document.

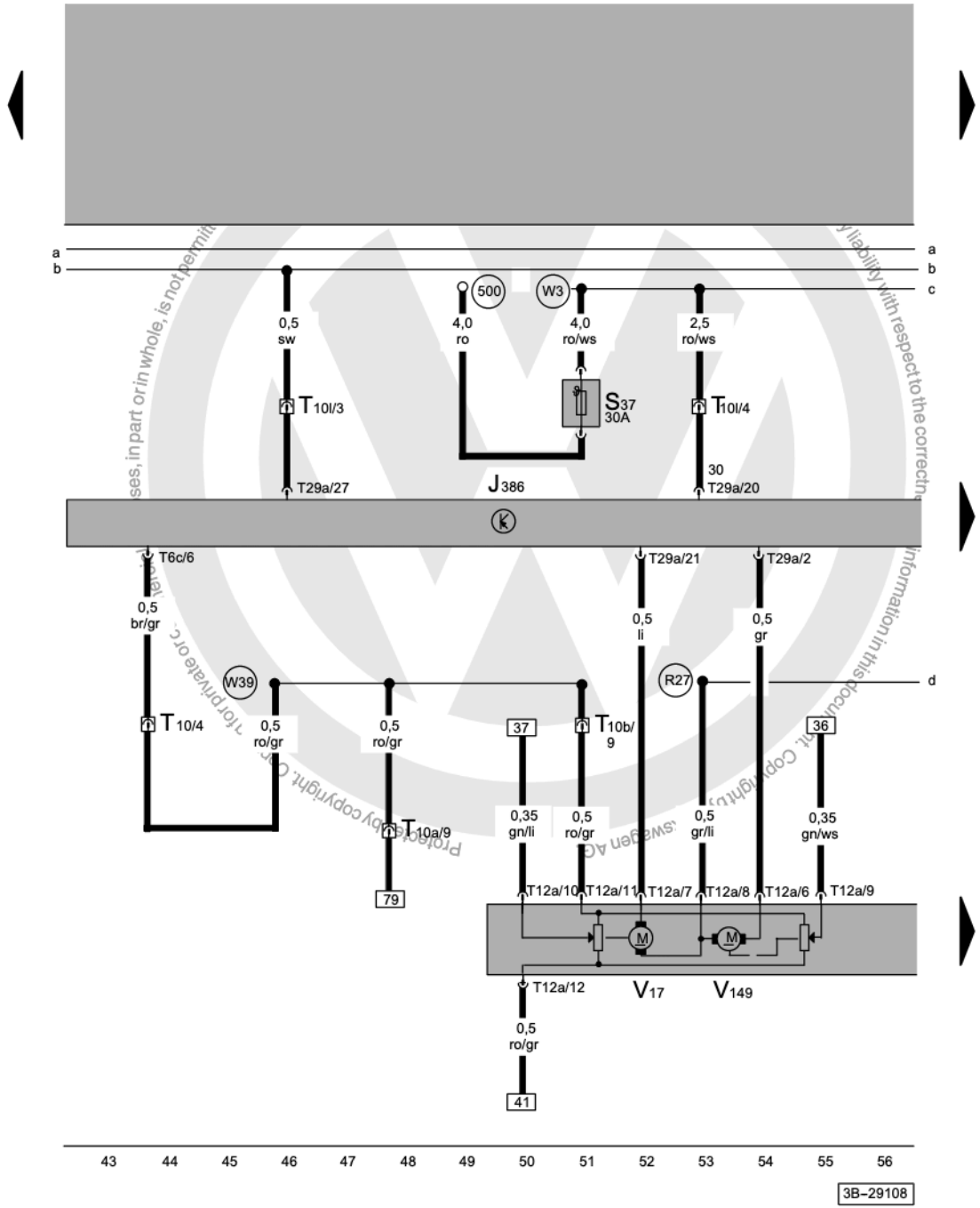

Door control module, driver side, driver's side mirror adjustment motor, motor for mirror adjustment, driver side

J386	Door control module, driver side
S37	Power Window Fuse
T6c	6-Pin Connector
T10	10-Pin Connector, brown, near driver`s seat
T10a	10-Pin Connector, grey, connector station A-pillar, left
T10b	10-Pin Connector, grey, connector station A-pillar, right
T10l	10-Pin Connector, brown, connector station A-pillar, left
T12a	12-Pin Connector
T29a	29-Pin Connector
V17	Driver's Side Mirror Adjustment Motor
V149	Motor for mirror adjustment, driver side
500	Threaded connection -1- (30) on the relay plate
R27	wire Connection (power mirror), in driver's door wiring harness
W3	wire connection, in rear wiring harness
W39	Connection for mirror memory (floor wiring harness)

ws	=	white
sw	=	black
ro	=	red
br	=	brown
gn	=	green
bl	=	blue
gr	=	grey
li	=	lilac
ge	=	yellow
or	=	orange
rs	=	pink

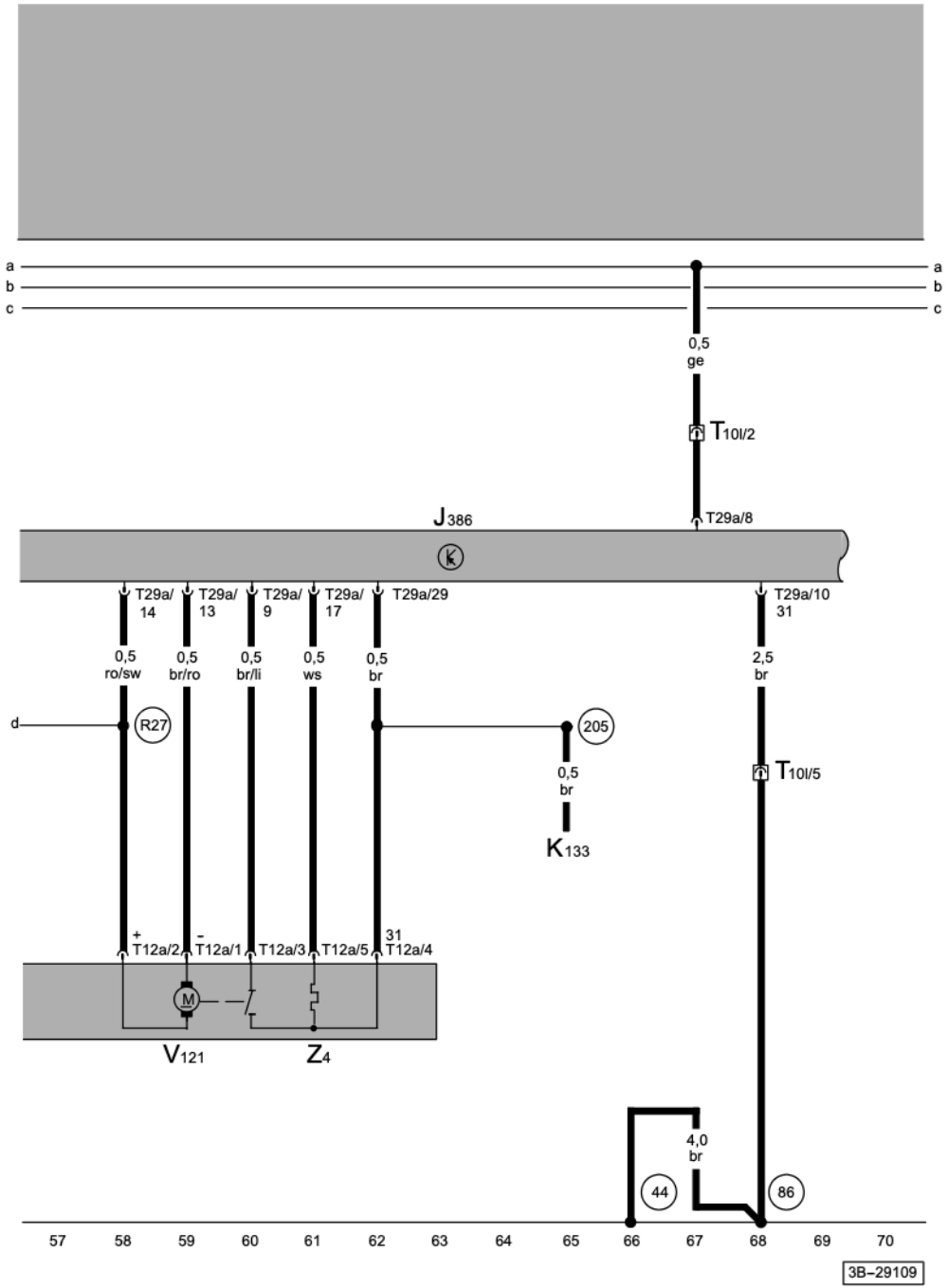

Door control module, driver side, motor for fold-in mirror, driver side, heated outside mirror, driver side

J386	Door control module, driver side
K133	Warning light for central locking -SAFE-
T10l	10-Pin Connector, brown, A-pillar, left
T12a	12-Pin Connector
T29a	29-Pin Connector
V121	Motor for fold-in mirror, driver side
Z4	Heated outside mirror, driver side
44	Ground connection, on left A-pillar, lower part
86	Ground connection -1-, in rear wiring harness
205	Ground connection, in drivers door wiring harness
R27	wire Connection (power mirror), in driver's door wiring harness

ws	=	white
sw	=	black
ro	=	red
br	=	brown
gn	=	green
bl	=	blue
gr	=	grey
li	=	lilac
ge	=	yellow
or	=	orange
rs	=	pink

Protected by copyright. Copying for private or commercial purposes, in part or in whole, is not permitted unless authorised by Volkswagen AG. Volkswagen AG does not guarantee or accept any liability with respect to the correctness of information in this document. Copyright by Volkswagen AG.

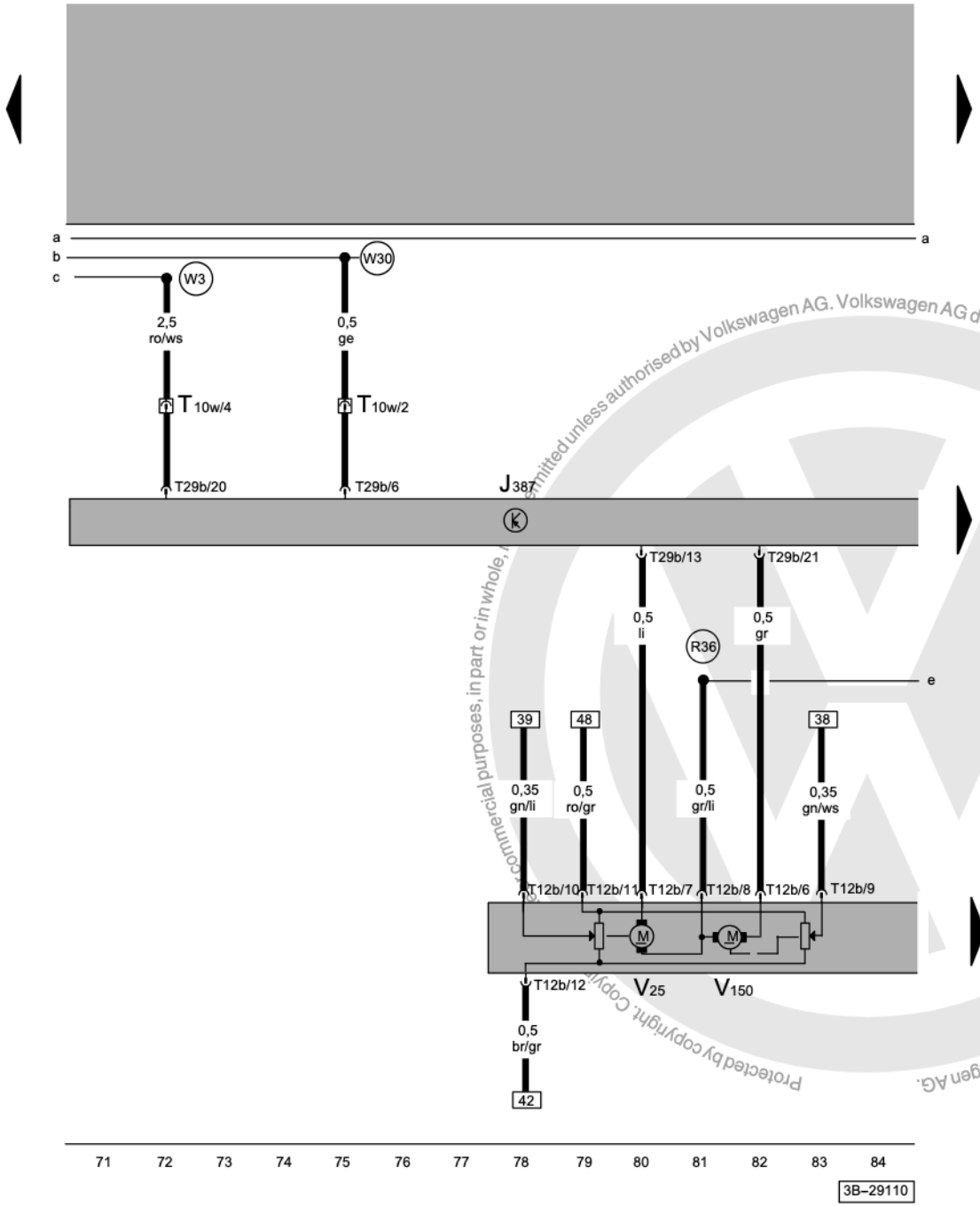

Door control module, passenger side, passenger's side mirror adjustment motor, motor for mirror adjustment, passenger side

J387	Door control module, passenger side
T10w	10-Pin Connector, black, connector station A-pillar, right
T12b	12-Pin Connector
T29b	29-Pin Connector
V25	Passenger's Side Mirror Adjustment Motor
V150	Motor for mirror adjustment, passenger side
R36	connection (mirror adjustment), in door wiring harness, passenger side
W3	wire connection, in rear wiring harness
W30	Plus connector -2- (B-Bus), in wiring harness, floor

ws	=	white
sw	=	black
ro	=	red
br	=	brown
gn	=	green
bl	=	blue
gr	=	grey
li	=	lilac
ge	=	yellow
or	=	orange
rs	=	pink

Protected by copyright. Copyright by Volkswagen AG. Volkswagen AG does not guarantee or accept any liability with respect to the correctness of information in this document. Copying for commercial purposes, in part or in whole, is not permitted unless authorised by Volkswagen AG.

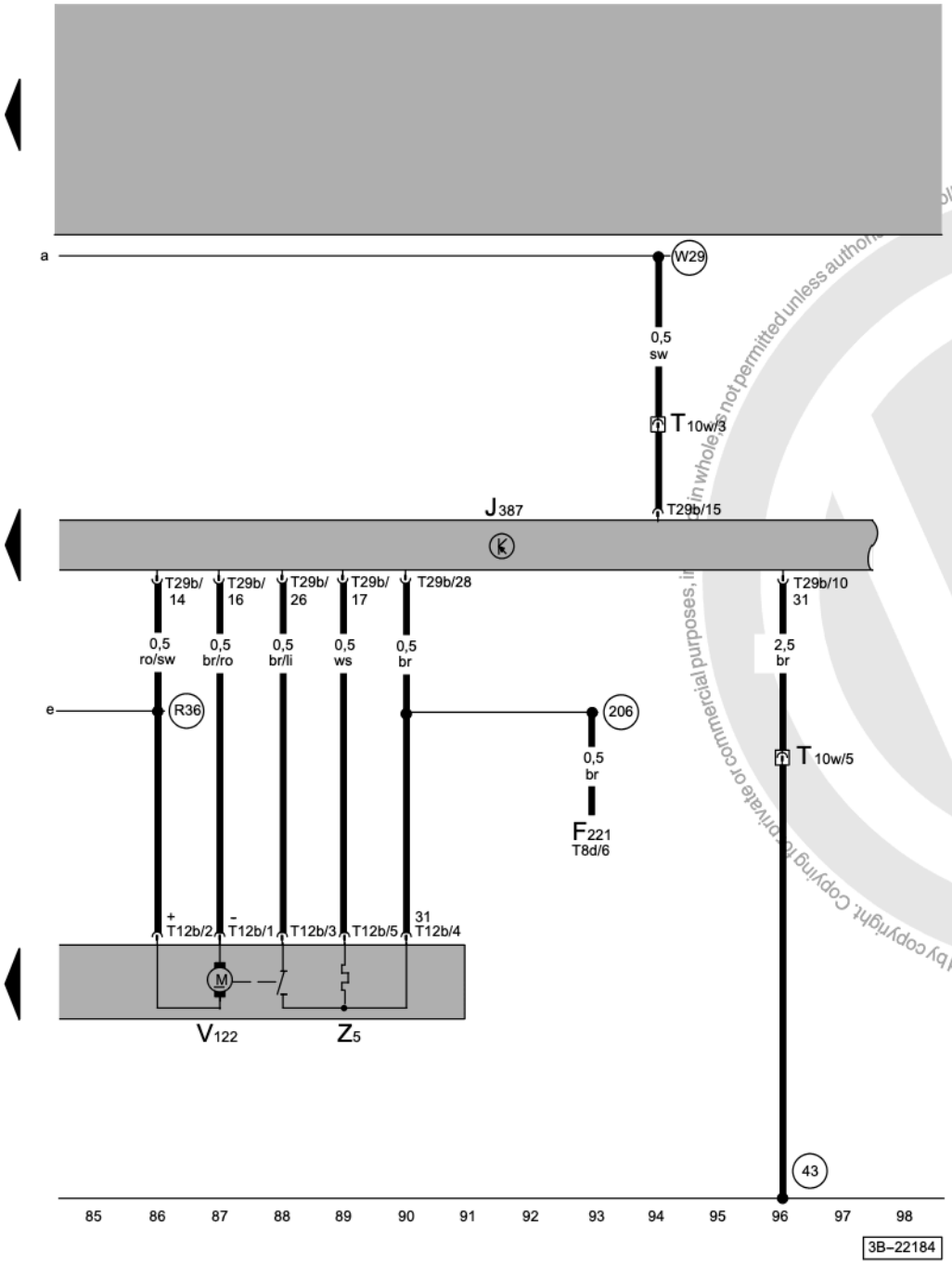

Door control module, motor for fold-in mirror, passenger side, heated outside mirror, passenger side

F221	Lock unit for central locking, passenger side
J387	Door control module, passenger side
T8d	8-Pin Connector, black, on lock unit for central locking, passenger side
T10w	10-Pin Connector, black, connector station A-pillar, right
T12b	12-Pin Connector
T29b	29-Pin Connector
V122	Motor for fold-in mirror, passenger side
Z5	Heated outside mirror, passenger side
43	Ground connection, on right A-pillar, lower part
206	Ground connection, in passenger's door wiring harness
R36	connection (mirror adjustment), in door wiring harness, passenger side
W29	connection (A-Bus), in floor wiring harness

ws	=	white
sw	=	black
ro	=	red
br	=	brown
gn	=	green
bl	=	blue
gr	=	grey
li	=	lilac
ge	=	yellow
or	=	orange
rs	=	pink

Protected by copyright. Copying for private or commercial purposes, in whole or in part, is not permitted unless authorised by Volkswagen AG. Volkswagen AG does not guarantee or accept any liability with respect to the correctness of information in this document. Copyright by Volkswagen AG.